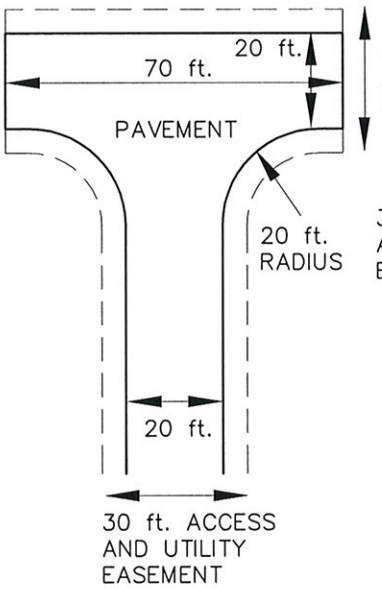

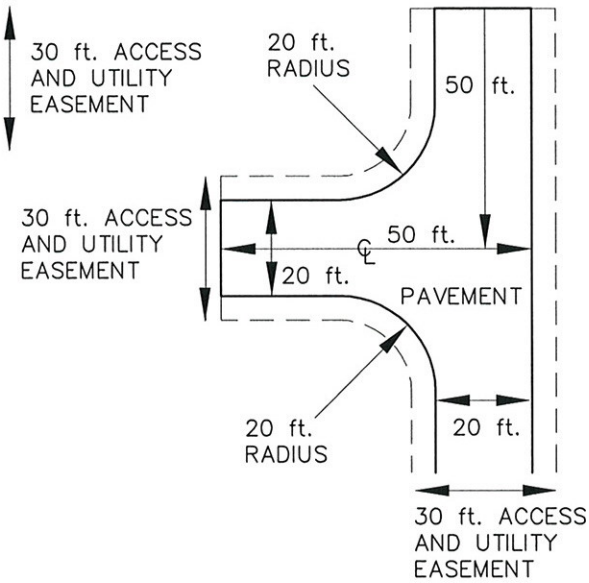

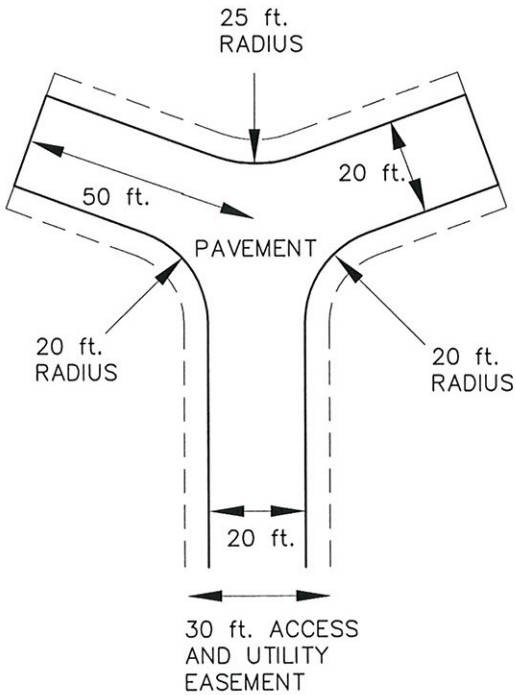

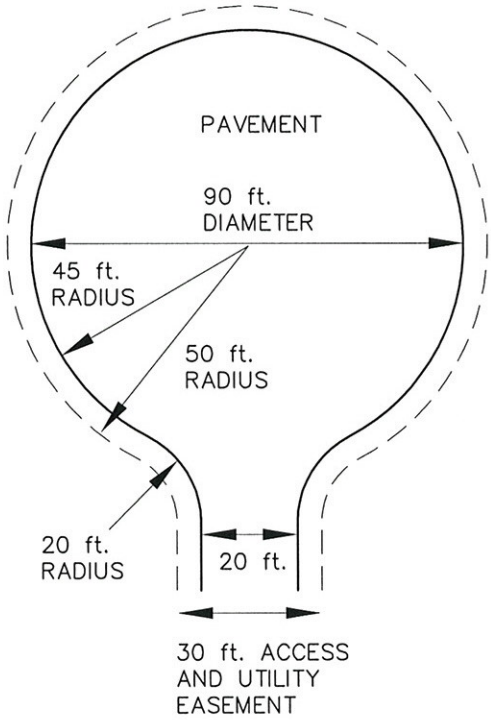

Approved: June 17, 2005 City Engineer Date	City of BONNEY Lake	Dwg No: **S12**
STREET STANDARD DETAIL		**HAMMERHEAD TURNAROUND**